PNEUMATIC 90° ACTUATOR

AT101U

Double acting & spring return · 90°

T.D.S. AT101U-DM · issued 10/09

Air Torque AT101U pneumatic 90° actuator, offered double acting (D) or spring return (S). Full output torque, dimensions and ISO 5211 mounting data from Air Torque T.D.S. AT101U-DM.

- Double acting (D) and spring return (S) versions
- 8 spring sets, S 05 to S 12
- ISO 5211 F05 + F07 standard; F03 + F05 / F04 + F07 / F05 optional
- Pressure connection G1/8", ports 2 and 4
- ST, HT and LLT temperature range options

• 0° – 90° ROTATION

• ISO 5211 F05 + F07

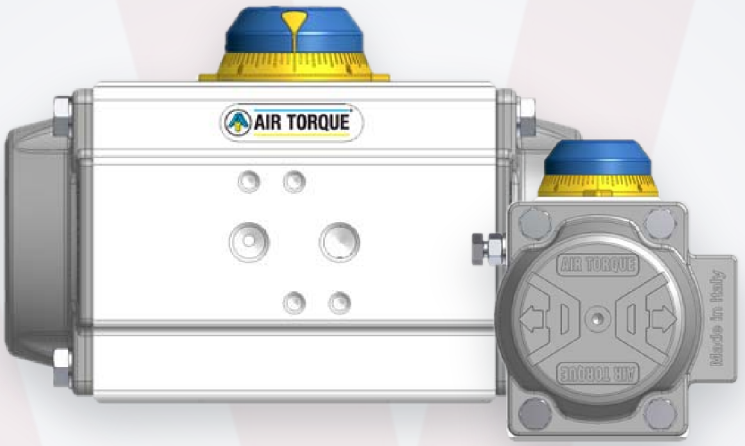

• ANCILLARY AA 1

8 bar	35.2 Nm	1.61 kg	153.5 mm
MAX. PRESSURE	DA TORQUE AT 6 BAR	APPROX. WEIGHT, D	OVERALL LENGTH

Output torque.

NM AT SUPPLY PRESSURE

DOUBLE ACTING (D)

Pressure	2.5 bar	3 bar	3.5 bar	4 bar	4.2 bar	4.5 bar	5 bar	5.5 bar	6 bar	7 bar	8 bar	Approx. weight (kg)
D	14.7	17.6	20.5	23.5	24.6	26.4	29.3	32	35.2	41	46.9	1.61

SPRING RETURN (S)

air stroke 0° → 90° · spring stroke 90° → 0°

Spring set	2.5 bar		3 bar		3.5 bar		4 bar		4.2 bar		4.5 bar		5 bar		5.5 bar		6 bar		7 bar		8 bar		Spring stroke		Approx. weight (kg)
	Start	End	Start	End	Start	End	Start	End	Start	End	Start	End	Start	End	Start	End	Start	End	Start	End	Start	End	Start	End	
S 05	**9.1**	**6.2**	12.0	9.2	15.0	12.1	17.9	15	19.1	16.2	20.8	17.9	23.8	20.9									**8.4**	**5.5**	**1.71**
S 06	8.0	4.5	**10.9**	**7.5**	13.9	10.4	16.8	13.3	18	14.5	19.7	16.3	22.7	19.2	25.6	22.1							**10.1**	**6.7**	**1.73**
S 07			9.8	5.8	**12.8**	**8.7**	15.7	11.6	16.9	12.8	18.6	14.6	21.5	17.5	24.5	20.4	27.4	23.4					**11.8**	**7.8**	**1.75**
S 08					11.6	7	**14.6**	**10.0**	**15.7**	**11.1**	17.5	12.9	20.4	15.8	23.4	18.7	26.3	21.7	32.2	27.5			**13.5**	**8.9**	**1.77**
S 09							13.5	8.3	15	9.4	**16.4**	**11.2**	19.3	14.1	22.3	17.1	25.2	20	31.1	25.9	36.9	31.7	**15.2**	**10**	**1.79**
S 10											15.3	9.5	**18.2**	**12.4**	21.1	15.4	24.1	18.3	29.9	24.2	35.8	30	**16.9**	**11.1**	**1.81**
S 11													17.1	10.8	**20**	**13.7**	23	16.6	28.8	22.5	34.7	28.3	**18.6**	**12.2**	**1.83**
S 12															18.9	12	**21.9**	**14.9**	27.7	20.8	33.6	26.7	**20.2**	**13.3**	**1.85**

Highlighted figures are shown in bold on the Air Torque data sheet. Blank cells: no value given by Air Torque for that spring set and pressure.

DIMENSIONS

Drawing (mm)

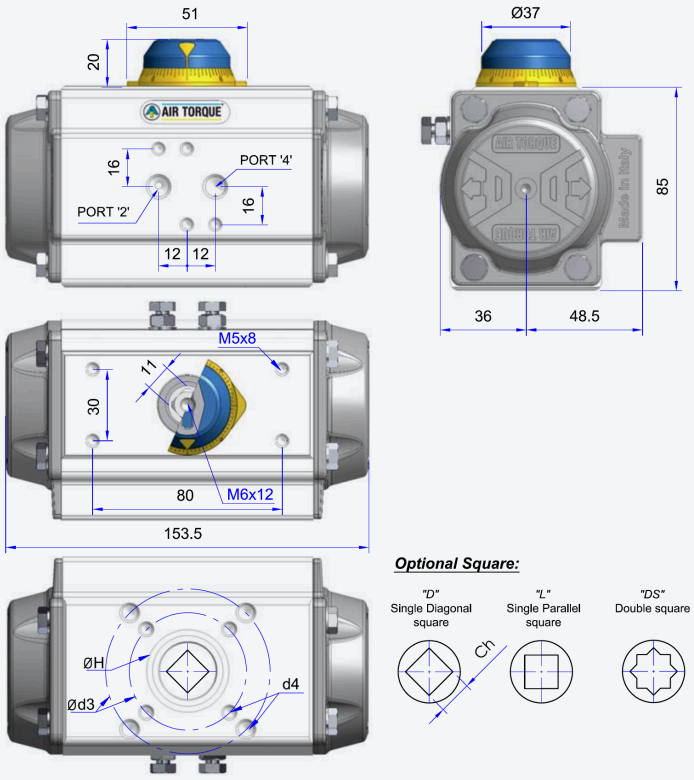

ISO 5211 FLANGE DIMENSIONS

	STD		Optional				
ISO 5211	**F05 + F07**		**F03 + F05**		**F04 + F07**		**F05**
Ø d2	35	NA	25	NA	30	NA	35
Ø d3	50	70	36	50	42	70	50
d4	M6x9	M8x12	M5x8	M6x9	M5x8	M8x12	M6x9
Ø H	35		25		30		35
Ch x l min. – D	9x11 – 14x16						
Ch x l min. – DS	11x19 – 14x16						
h min.	0.5	0.5	0.5	0.5	0.5	0.5	0.5
h1	2	NA	1.5	NA	2	NA	2

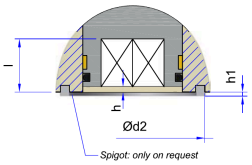

Spigot: only on request

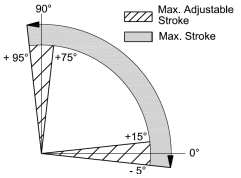

Rotation & stroke adjustment

Technical data.

AT101U · T.D.S. AT101U-DM

Max. pressure	8 bar
Rotation (standard)	0° – 90°
Stroke adjustment	For 1° adjustment, 1/6 turn
Chamber Ø	63 mm
Air volume	Opening 0.16 L · closing 0.26 L
Moving time (A)	D: opening 0.25 s · closing 0.30 s S: opening 0.30 s · closing 0.35 s

Pressure connection	Ports 2 and 4 · G1/8"
Ancillary attachment	AA 1
Temperature (B)	ST (standard): -40 to +80 °C HT (high temperature): -15 to +150 °C LLT (extreme low temperature): -55 to +80 °C
Operating medium	Free of dust and oil – see note below

Operating medium. The operating medium must be free of dust and oil. Maximum particle size 30 µm (ISO 8573 Part 1, Class 5). To prevent water condensation and/or solidification (ice when the actuator works below 0 °C), the operating medium must have a dew point equal to -20 °C or at least 10 °C below the ambient temperature (ISO 8573 Part 1, Class 3).

A) The moving times above were obtained under the following test conditions: (1) room temperature, (2) actuator stroke 90°, (3) solenoid valve with 4 mm orifice and flow capacity Qn 400 L/min, (4) inside pipe diameter 8 mm, (5) medium clean air, (6) air supply pressure 5.5 bar (79.75 psi), (7) actuator without external resistance load. In field applications where one or more of these parameters differ, the moving time will be different.

B) Every temperature range option requires proper components and lubricant. See Air Torque technical data sheet T.D.S. U00501E.

Data supplied by Air Torque S.p.A. and provided for reference only. Specifications may change without notice – please confirm details with Actuation Valve & Control before ordering.

AV®

Sizing an Air Torque actuator?

Talk to our UK team about torque sizing, spring sets, mounting kits and complete actuated valve packages.

actuation.co.uk